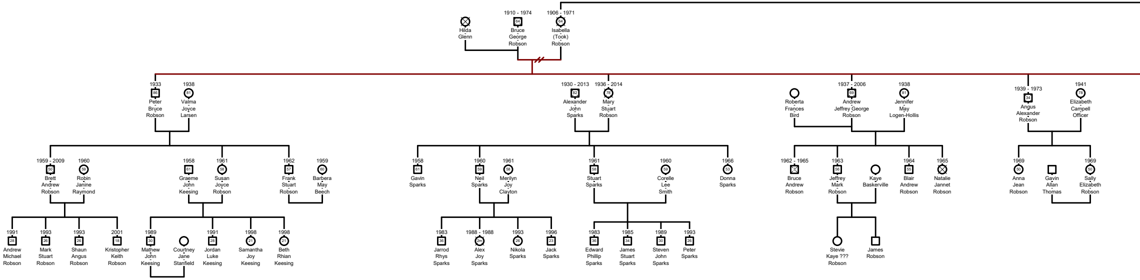
Hilda Glenn
1910 - 1974
64
Bruce George Robson
1906 - 1971
64
Isabella (Took) Robson
1933
86
Peter Bruce Robson
1938
81
Valma Joyce Larsen
1930 - 2013
82
Alexander John Sparks
1936 - 2014
78
Mary Stuart Robson
Roberta Frances Bird
1937 - 2006
69
Andrew Jeffrey George Robson
1938
81
Jennifer May Logen-Hollis
1939 - 1973
34
Angus Alexander Robson
1941
78
Elizabeth Campell Officer
1959 - 2009
50
Brett Andrew Robson
1960
59
Robin Janine Raymond
1958
61
Graeme John Keesing
1961
58
Susan Joyce Robson
1962
57
Frank Stuart Robson
1959
60
Barbera May Beech
1958
61
Gavin Sparks
1960
59
Neil Sparks
1961
58
Merilyn Joy Clayton
1961
58
Stuart Sparks
1960
59
Corelle Lee Smith
1966
53
Donna Sparks
1962 - 1965
3
Bruce Andrew Robson
1963
56
Jeffrey Mark Robson
Kaye Baskerville
1964
55
Blair Andrew Robson
1965
Natalie Jannet Robson
1969
50
Anna Jean Robson
Gavin Allan Thomas
1969
50
Sally Elizabeth Robson
1991
28
Andrew Michael Robson
1993
26
Mark Stuart Robson
1993
26
Shaun Angus Robson
2001
18
Kristopher Keith Robson
1989
30
Mathew John Keesing
Courtney Jane Stanfield
1991
28
Jordan Luke Keesing
1998
21
Samantha Joy Keesing
1998
21
Beth Rhian Keesing
1983
36
Jarrod Rhys Sparks
1988 - 1988
2m
Alex Joy Sparks
1993
26
Nikola Sparks
1996
23
Jack Sparks
1983
36
Edward Phillip Sparks
1985
34
James Stuart Sparks
1989
30
Steven John Sparks
1993
26
Peter Sparks
Stevie Kaye ??? Robson
James Robson

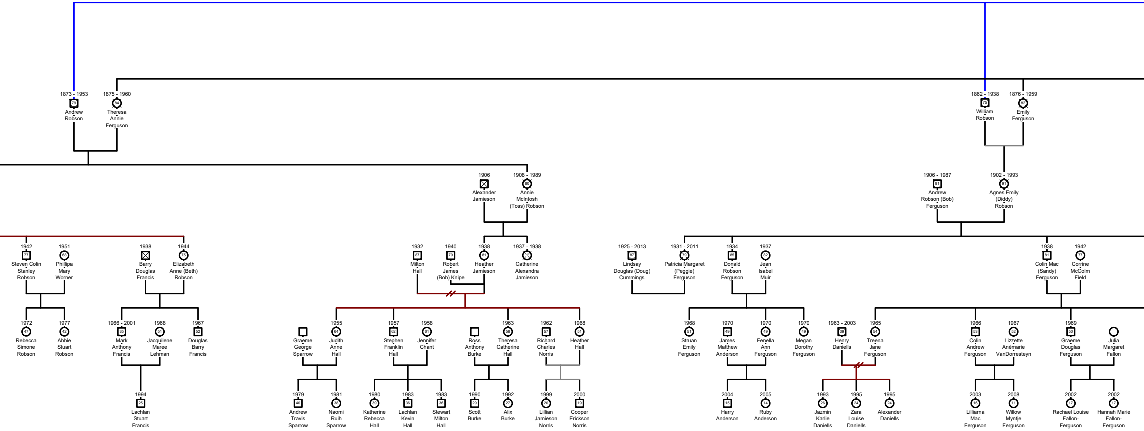
1873 - 1953
79
Andrew Robson
1875 - 1960
84
Theresa Annie Ferguson
1862 - 1938
75
William Robson
1876 - 1959
82
Emily Ferguson
1906
Alexander Jamieson
1908 - 1989
80
Annie McIntosh (Toss) Robson
1906 - 1987
81
Andrew Robson (Bob) Ferguson
1902 - 1993
91
Agnes Emily (Diddy) Robson
1942
77
Steven Colin Stanley Robson
1951
68
Phillipa Mary Worner
1938
Barry Douglas Francis
1944
75
Elizabeth Anne (Beth) Robson
1932
87
Milton Hall
1940
79
Robert James (Bob) Knipe
1938
81
Heather Jamieson
1937 - 1938
1
Catherine Alexandra Jamieson
1925 - 2013
87
Lindsay Douglas (Doug) Cummings
1931 - 2011
79
Patricia Margaret (Peggie) Ferguson
1934
85
Donald Robson Ferguson
1937
82
Jean Isabel Muir
1938
81
Colin Mac (Sandy) Ferguson
1942
77
Corrine McColm Field
1972
47
Rebecca Simone Robson
1977
42
Abbie Stuart Robson
1966 - 2001
35
Mark Anthony Francis
1968
51
Jacquilene Maree Lehman
1967
52
Douglas Barry Francis
Graeme George Sparrow
1955
64
Judith Anne Hall
1957
62
Stephen Franklin Hall
1958
61
Jennifer Chant
Ross Anthony Burke
1963
56
Theresa Catherine Hall
1962
57
Richard Charles Norris
1968
51
Heather Hall
1968
51
Struan Emily Ferguson
1970
49
James Matthew Anderson
1970
49
Fenella Ann Ferguson
1970
49
Megan Dorothy Ferguson
1963 - 2003
39
Henry Daniells
1965
54
Treena Jane Ferguson
1966
53
Colin Andrew Ferguson
1967
52
Lizzette Anemarie VanDorresteyn
1969
50
Graeme Douglas Ferguson
Julia Margaret Fallon
1994
25
Lachlan Stuart Francis
1979
40
Andrew Travis Sparrow
1981
38
Naomi Ruih Sparrow
1980
39
Katherine Rebecca Hall
1983
36
Lachlan Kevin Hall
1983
36
Stewart Milton Hall
1990
29
Scott Burke
1992
27
Alix Burke
1999
20
Lillian Jamieson Norris
2000
19
Cooper Erickson Norris
2004
15
Harry Anderson
2005
14
Ruby Anderson
1993
26
Jazmin Karlie Daniells
1995
24
Zara Louise Daniells
1995
24
Alexander Daniells
2003
16
Lilliarna Mac Ferguson
2008
11
Willow Myntje Ferguson
2002
17
Rachael Louise Fallon-Ferguson
2002
17
Hannah Marie Fallon-Ferguson

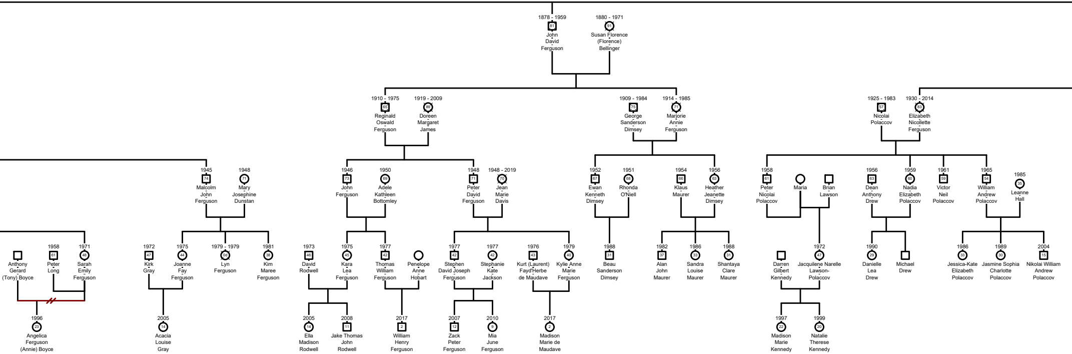
1878 - 1959
81
John David Ferguson
1880 - 1971
91
Susan Florence (Florence) Bellinger
1910 - 1975
65
Reginald Oswald Ferguson
1919 - 2009
89
Doreen Margaret James
1909 - 1984
75
George Sanderson Dimsey
1914 - 1985
71
Marjorie Annie Ferguson
1925 - 1983
57
Nicolai Polaccov
1930 - 2014
83
Elizabeth Nicollette Ferguson
1945
74
Malcolm John Ferguson
1948
71
Mary Josephine Dunstan
1946
73
John Ferguson
1950
69
Adele Kathleen Bottomley
1948
71
Peter David Ferguson
1948 - 2019
70
Jean Marie Davis
1952
67
Ewan Kenneth Dimsey
1951
68
Rhonda O'Niell
1954
66
Klaus Maurer
1956
63
Heather Jeanette Dimsey
1958
61
Peter Nicolai Polaccov
Maria
Brian Lawson
1956
63
Dean Anthony Drew
1959
60
Nadia Elizabeth Polaccov
1961
59
Victor Neil Polaccov
1965
54
William Andrew Polaccov
1985
35
Leanne Hall
Anthony Gerard (Tony) Boyce
1958
61
Peter Long
1971
48
Sarah Emily Ferguson
1972
47
Kirk Gray
1975
44
Joanne Fay Ferguson
1979 - 1979
0d
Lyn Ferguson
1981
38
Kim Maree Ferguson
1973
46
David Rodwell
1975
45
Kara Lea Ferguson
1977
42
Thomas William Ferguson
Penelope Anne Hobart
1977
42
Stephen David Joseph Ferguson
1977
42
Stephanie Kate Jackson
1976
43
Kurt (Laurent) Fayd'Herbe de Maudave
1979
40
Kylie Anne Marie Ferguson
1988
31
Beau Sanderson Dimsey
1982
37
Alan John Maurer
1986
33
Sandra Louise Maurer
1988
31
Shantaya Clare Maurer
Darren Gilbert Kennedy
1972
47
Jacquilene Narelle Lawson-Polaccov
1990
29
Danielle Lea Drew
Michael Drew
1986
33
Jessica-Kate Elizabeth Polaccov
1989
30
Jasmine Sophia Charlotte Polaccov
2004
15
Nikolai William Andrew Polaccov
1996
23
Angelica Ferguson (Annie) Boyce
2005
14
Acacia Louise Gray
2005
14
Ella Madison Rodwell
2008
11
Jake Thomas John Rodwell
2017
2
William Henry Ferguson
2007
12
Zack Peter Ferguson
2010
9
Mia June Ferguson
2017
2
Madison Marie de Maudave
1997
22
Madison Marie Kennedy
1999
20
Natalie Therese Kennedy

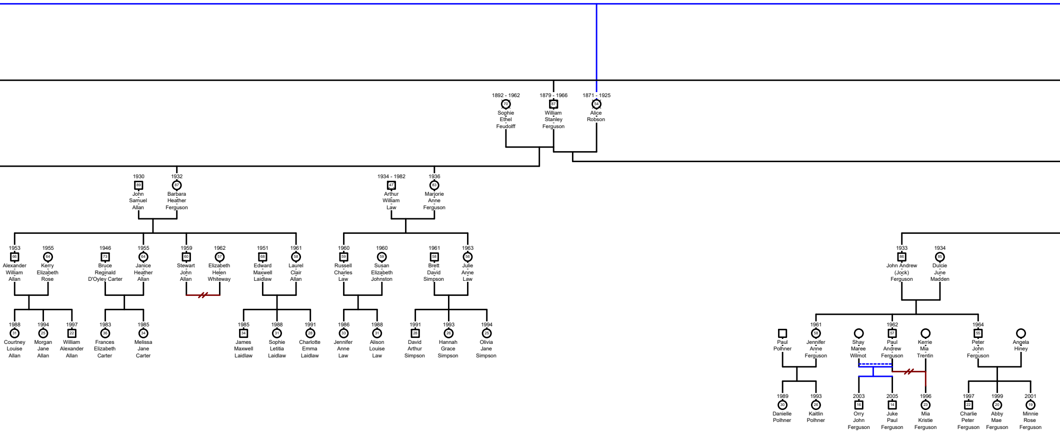
1892 - 1962
70
Sophie Ethel Feudolff
1879 - 1966
87
William Stanley Ferguson
1871 - 1925
54
Alice Robson
1930
89
John Samuel Allan
1932
87
Barbara Heather Ferguson
1934 - 1982
47
Arthur William Law
1936
83
Marjorie Anne Ferguson
1953
66
Alexander William Allan
1955
64
Kerry Elizabeth Rose
1946
73
Bruce Reginald D'Oyley Carter
1955
64
Janice Heather Allan
1959
60
Stewart John Allan
1962
57
Elizabeth Helen Whiteway
1951
68
Edward Maxwell Laidlaw
1961
58
Laurel Clair Allan
1960
59
Russell Charles Law
1960
59
Susan Elizabeth Johnston
1961
58
Brett David Simpson
1963
56
Julie Anne Law
1933
86
John Andrew (Jock) Ferguson
1934
85
Dulcie June Madden
1988
31
Courtney Louise Allan
1994
25
Morgan Jane Allan
1997
22
William Alexander Allan
1983
36
Frances Elizabeth Carter
1985
34
Melissa Jane Carter
1985
34
James Maxwell Laidlaw
1988
31
Sophie Letitia Laidlaw
1991
28
Charlotte Emma Laidlaw
1986
33
Jennifer Anne Law
1988
31
Alison Louise Law
1991
28
David Arthur Simpson
1993
26
Hannah Grace Simpson
1994
25
Olivia Jane Simpson
Paul Polhner
1961
58
Jennifer Anne Ferguson
Shay Maree Wilmot
1962
57
Paul Andrew Ferguson
Kerrie Mia Trentin
1964
55
Peter John Ferguson
Angela Hiney
1989
30
Danielle Polhner
1993
26
Kaitlin Polhner
2003
16
Orry John Ferguson
2005
14
Juke Paul Ferguson
1996
23
Mia Kristie Ferguson
1997
22
Charlie Peter Ferguson
1999
20
Abby Mae Ferguson
2001
19
Minnie Rose Ferguson

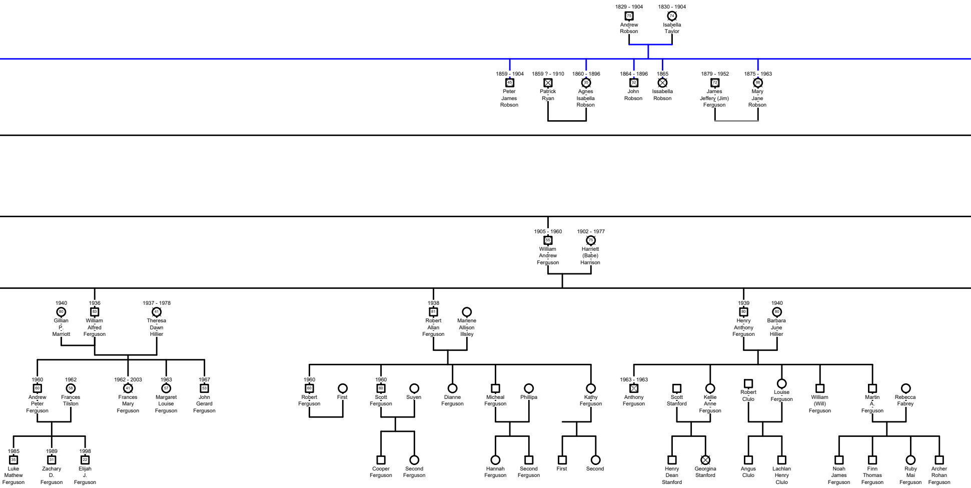
1829 - 1904
75
Andrew Robson
1830 - 1904
74
Isabella Taylor
1859 - 1904
45
Peter James Robson
1859 ? - 1910
Patrick Ryan
1860 - 1896
35
Agnes Isabella Robson
1864 - 1896
32
John Robson
1865
Issabella Robson
1879 - 1952
72
James Jeffery (Jim) Ferguson
1875 - 1963
88
Mary Jane Robson
1905 - 1960
55
William Andrew Ferguson
1902 - 1977
75
Harriett (Babe) Harrison
1940
80
Gillian P. Marriott
1936
83
William Alfred Ferguson
1937 - 1978
41
Theresa Dawn Hillier
1938
81
Robert Allan Ferguson
Marlene Allison Illsley
1939
80
Henry Anthony Ferguson
1940
80
Barbara June Hillier
1960
60
Andrew Peter Ferguson
1962
58
Frances Tilston
1962 - 2003
41
Frances Mary Ferguson
1963
57
Margaret Louise Ferguson
1967
53
John Gerard Ferguson
1960
60
Robert Ferguson
First
1960
60
Scott Ferguson
Suyen
Dianne Ferguson
Micheal Ferguson
Phillipa
Kathy Ferguson
1963 - 1963
0
Anthony Ferguson
Scott Stanford
Kellie Anne Ferguson
Robert Clulo
Louise Ferguson
William (Will) Ferguson
Martin A. Ferguson
Rebecca Fabrey
1985
35
Luke Mathew Ferguson
1989
31
Zachary D. Ferguson
1998
22
Elijah J. Ferguson
Cooper Ferguson
Second Ferguson
Hannah Ferguson
Second Ferguson
First
Second
Henry Dean Stanford
Georgina Stanford
Angus Clulo
Lachlan Henry Clulo
Noah James Ferguson
Finn Thomas Ferguson
Ruby Mai Ferguson
Archer Rohan Ferguson

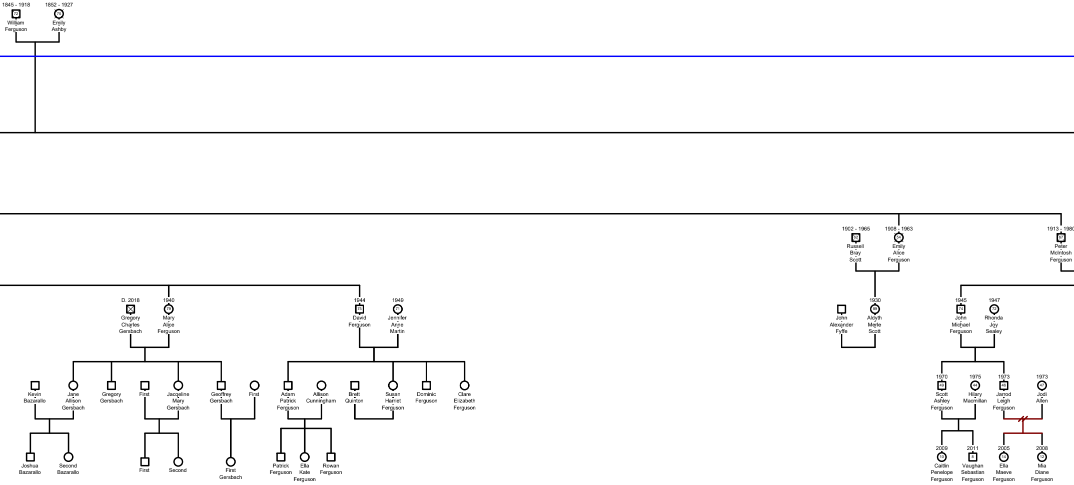
1845 - 1918
72
William Ferguson
1852 - 1927
75
Emily Ashby
1902 - 1965
62
Russell Bray Scott
1908 - 1963
54
Emily Alice Ferguson
1913 - 1980
67
Peter McIntosh Ferguson
D. 2018
Gregory Charles Gersbach
1940
79
Mary Alice Ferguson
1944
75
David Ferguson
1949
71
Jennifer Anne Martin
John Alexander Fyffe
1930
89
Aldyth Merle Scott
1945
74
John Michael Ferguson
1947
72
Rhonda Joy Sealey
Kevin Bazarallo
Jane Allison Gersbach
Gregory Gersbach
First
Jacqeline Mary Gersbach
Geoffrey Gersbach
First
Adam Patrick Ferguson
Allison Cunningham
Brett Quinton
Susan Harriet Ferguson
Dominic Ferguson
Clare Elizabeth Ferguson
1970
49
Scott Ashley Ferguson
1975
44
Hilary Macmillan
1973
46
Jarrod Leigh Ferguson
1973
47
Jodi Allen
Joshua Bazarallo
Second Bazarallo
First
Second
First Gersbach
Patrick Ferguson
Ella Kate Ferguson
Rowan Ferguson
2009
10
Caitlin Penelope Ferguson
2011
8
Vaughan Sebastian Ferguson
2005
14
Ella Maeve Ferguson
2008
12
Mia Diane Ferguson

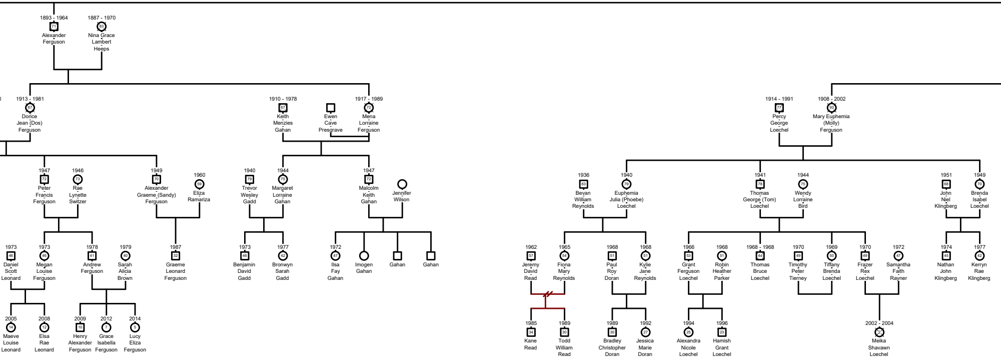
1893 - 1964
71
Alexander Ferguson
1887 - 1970
83
Nina Grace Lambert Heeps
1913 - 1981
67
Dorice Jean (Dos) Ferguson
1910 - 1978
67
Keith Menzies Gahan
Ewen Cave Presgrave
1917 - 1989
72
Mena Lorraine Ferguson
1947
72
Peter Francis Ferguson
1946
73
Rae Lynette Switzer
1949
70
Alexander Graeme (Sandy) Ferguson
1960
59
Eliza Ramariza
1940
79
Trevor Wesley Gadd
1944
75
Margaret Lorraine Gahan
1947
72
Malcolm Keith Gahan
Jennifer Wilson
1973
46
Daniel Scott Leonard
1973
46
Megan Louise Ferguson
1978
41
Andrew Ferguson
1979
40
Sarah Alicia Brown
1987
32
Graeme Leonard Ferguson
1973
46
Benjamin David Gadd
1977
42
Bronwyn Sarah Gadd
1972
47
Ilsa Fay Gahan
Imogen Gahan
Gahan
Gahan
2005
14
Maeve Louise Leonard
2008
12
Elsa Rae Leonard
2009
10
Henry Alexander Ferguson
2012
7
Grace Isabella Ferguson
2014
5
Lucy Eliza Ferguson
1914 - 1991
77
Percy George Loechel
1908 - 2002
93
Mary Euphemia (Molly) Ferguson
1936
83
Bevan William Reynolds
1940
79
Euphemia Julia (Phoebe) Loechel
1941
78
Thomas George (Tom) Loechel
1944
75
Wendy Lorraine Bird
1951
68
John Niel Klingberg
1949
70
Brenda Isabel Loechel
1962
57
Jeremy David Read
1965
54
Fiona Mary Reynolds
1968
51
Paul Roy Doran
1968
51
Kylie Jane Reynolds
1966
53
Grant Ferguson Loechel
1968
51
Robin Heather Parker
1968 - 1968
4d
Thomas Bruce Loechel
1970
49
Timothy Peter Tierney
1969
50
Tiffany Brenda Loechel
1970
49
Frazer Rex Loechel
1972
47
Samantha Faith Rayner
1974
45
Nathan John Klingberg
1977
42
Kerryn Rae Klingberg
1985
34
Kane Read
1989
30
Todd William Read
1989
30
Bradley Christopher Doran
1992
27
Jessica Marie Doran
1994
25
Alexandra Nicole Loechel
1996
23
Hamish Grant Loechel
2002 - 2004
2
Meika Shavawn Loechel

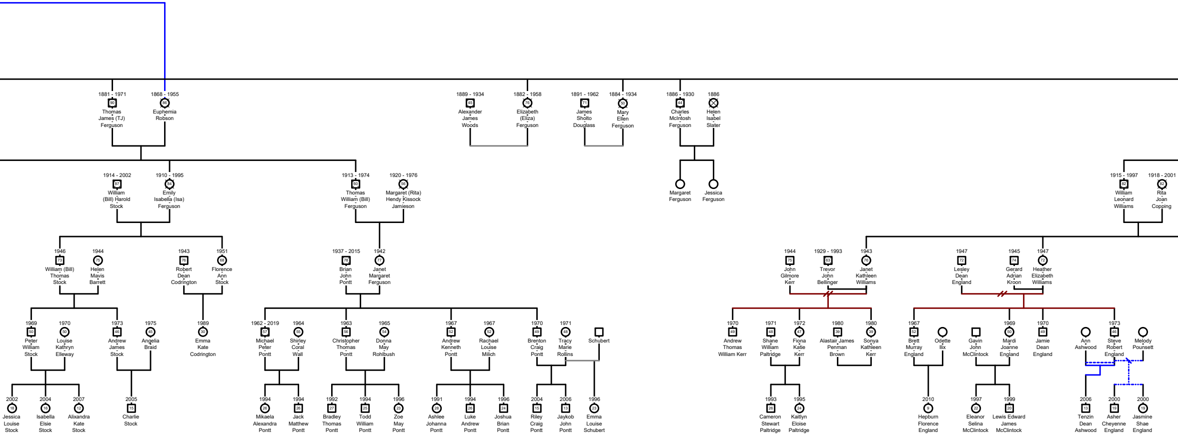
1881 - 1971 90 Thomas James (TJ) Ferguson
1868 - 1955 86 Euphemia Robson
1889 - 1934 45 Alexander James Woods
1882 - 1958 76 Elizabeth (Eliza) Ferguson
1891 - 1962 71 James Sholto Douglass
1884 - 1934 50 Mary Ellen Ferguson
1886 - 1930 44 Charles McIntosh Ferguson
1886 Helen Isabel Slater
Margaret Ferguson
Jessica Ferguson
1914 - 2002 87 William (Bill) Harold Stock
1910 - 1995 84 Emily Isabella (Isa) Ferguson
1913 - 1974 60 Thomas William (Bill) Ferguson
1920 - 1976 56 Margaret (Rita) Hendy Kissock Jamieson
1915 - 1997 82 William Leonard Williams
1918 - 2001 82 Rita Joan Copping
1946 73 William (Bill) Thomas Stock
1944 75 Helen Mavis Barrett
1943 76 Robert Dean Codrington
1951 68 Florence Ann Stock
1937 - 2015 78 Brian John Pontt
1942 77 Janet Margaret Ferguson
1944 75 John Gilmore Kerr
1929 - 1993 63 Trevor John Bellinger
1943 76 Janet Kathleen Williams
1947 72 Lesley Dean England
1945 74 Gerard Adrian Kroon
1947 72 Heather Elizabeth Williams
1969 50 Peter William Stock
1970 50 Louise Kathryn Elleway
1973 46 Andrew James Stock
1975 45 Angelia Braid
1989 30 Emma Kate Codrington
1962 - 2019 57 Michael Peter Pontt
1964 55 Shirley Coral Wall
1963 56 Christopher Thomas Pontt
1965 54 Donna May Rohlbush
1967 52 Andrew Kenneth Pontt
1967 52 Rachael Louise Milich
1970 49 Brenton Craig Pontt
1971 48 Tracy Marie Rollins
Schubert
1970 49 Andrew Thomas William Kerr
1971 48 Shane William Paltridge
1972 47 Fiona Katie Kerr
1980 39 Alastair James Penman Brown
1980 39 Sonya Kathleen Kerr
1967 52 Brett Murray England
Odette Ilix
Gavin John McClintock
1969 50 Mardi Joanne England
1970 49 Jamie Dean England
Ann Ashwood
1973 46 Steve Robert England
Melody Pounsett
2002 18 Jessica Louise Stock
2004 16 Isabella Elsie Stock
2007 12 Alixandra Kate Stock
2005 15 Charlie Stock
1994 26 Mikaela Alexandra Pontt
1994 26 Jack Matthew Pontt
1992 27 Bradley Thomas Pontt
1994 25 Todd William Pontt
1996 23 Zoe May Pontt
1991 28 Ashlee Johanna Pontt
1994 26 Luke Andrew Pontt
1996 24 Joshua Brian Pontt
2004 15 Riley Craig Pontt
2006 13 Jaykob John Pontt
1996 23 Emma Louise Schubert
1993 26 Cameron Stewart Paltridge
1995 24 Kaitlyn Eloise Paltridge
2010 9 Hepburn Florence England
1997 22 Eleanor Selina McClintock
1999 20 Lewis Edward James McClintock
2006 13 Tenzin Dean Ashwood
2000 19 Asher Cheyenne England
2000 19 Jasmine Shae England

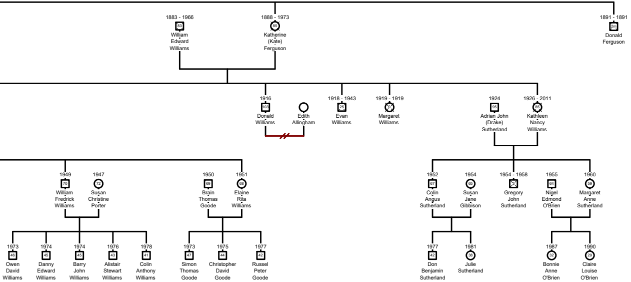
1883 - 1966 83 William Edward Williams
1888 - 1973 85 Katherine (Kate) Ferguson
1891 - 1891 2m Donald Ferguson
1916 103 Donald Williams
Edith Allingham
1918 - 1943 25 Evan Williams
1919 - 1919 0 Margaret Williams
1924 95 Adrian John (Drake) Sutherland
1926 - 2011 85 Kathleen Nancy Williams
1949 70 William Fredrick Williams
1947 72 Susan Christine Porter
1950 69 Brain Thomas Goode
1951 68 Elaine Rita Williams
1952 67 Colin Angus Sutherland
1954 65 Susan Jane Gibbison
1954 - 1958 3 Gregory John Sutherland
1955 64 Nigel Edmond O'Brien
1960 59 Margaret Anne Sutherland
1973 46 Owen David Williams
1974 45 Danny Edward Williams
1974 45 Barry John Williams
1976 43 Alistair Stewart Williams
1978 41 Colin Anthony Williams
1973 47 Simon Thomas Goode
1975 44 Christopher David Goode
1977 42 Russel Peter Goode
1977 42 Don Benjamin Sutherland
1981 38 Julie Sutherland
1987 32 Bonnie Anne O'Brien
1990 29 Claire Louise O'Brien