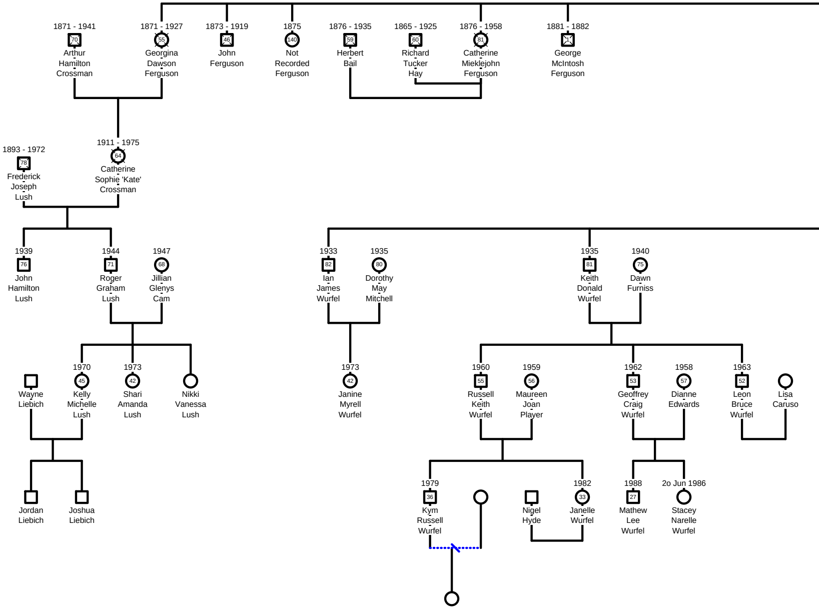
1871 - 1941 70 Arthur Hamilton Crossman
1871 - 1927 55 Georgina Dawson Ferguson
1873 - 1919 46 John Ferguson
1875 140 Not Recorded Ferguson
1876 - 1935 59 Herbert Bail
1865 - 1925 60 Richard Tucker Hay
1876 - 1958 81 Catherine Mieklejohn Ferguson
1881 - 1882 1 George McIntosh Ferguson
1893 - 1972 78 Frederick Joseph Lush
1911 - 1975 64 Catherine Sophie 'Kate' Crossman
1939 76 John Hamilton Lush
1944 71 Roger Graham Lush
1947 68 Jillian Glenys Cam
1933 82 Ian James Wurfel
1935 80 Dorothy May Mitchell
1935 81 Keith Donald Wurfel
1940 75 Dawn Furniss
Wayne Liebich
1970 45 Kelly Michelle Lush
1973 42 Shari Amanda Lush
Nikki Vanessa Lush
1973 42 Janine Myrell Wurfel
1960 55 Russell Keith Wurfel
1959 56 Maureen Joan Player
1962 53 Geoffrey Craig Wurfel
1958 57 Dianne Edwards
1963 52 Leon Bruce Wurfel
Lisa Caruso
Jordan Liebich
Joshua Liebich
1979 36 Kym Russell Wurfel
Nigel Hyde
1982 33 Janelle Wurfel
1988 27 Mathew Lee Wurfel
2o Jun 1986 Stacey Narelle Wurfel

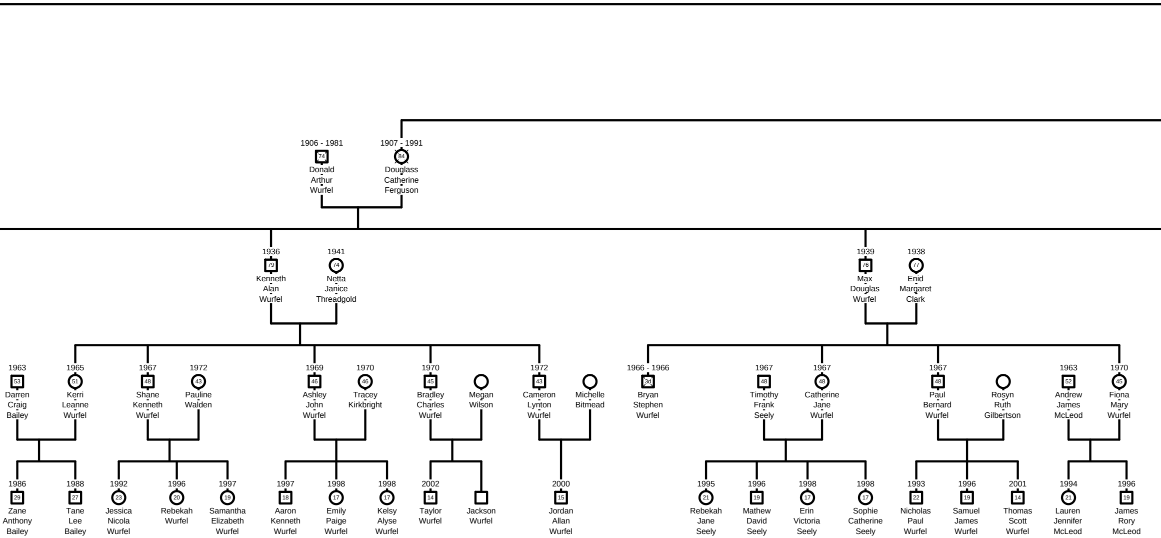
1906 - 1981 74 Donald Arthur Wurfel
1907 - 1991 84 Douglass Catherine Ferguson
1936 79 Kenneth Alan Wurfel
1941 74 Netta Janice Threadgold
1939 76 Max Douglas Wurfel
1938 77 Enid Margaret Clark
1963 53 Darren Craig Bailey
1965 51 Kerri Leanne Wurfel
1967 48 Shane Kenneth Wurfel
1972 43 Pauline Walden
1969 46 Ashley John Wurfel
1970 46 Tracey Kirkbright
1970 45 Bradley Charles Wurfel
Megan Wilson
1972 43 Cameron Lynton Wurfel
Michelle Bitmead
1966 - 1966 3d Bryan Stephen Wurfel
1967 48 Timothy Frank Seely
1967 48 Catherine Jane Wurfel
1967 48 Paul Bernard Wurfel
Rosyn Ruth Gilbertson
1963 52 Andrew James McLeod
1970 45 Fiona Mary Wurfel
1986 29 Zane Anthony Bailey
1988 27 Tane Lee Bailey
1992 23 Jessica Nicola Wurfel
1996 20 Rebekah Wurfel
1997 19 Samantha Elizabeth Wurfel
1997 18 Aaron Kenneth Wurfel
1998 17 Emily Paige Wurfel
1998 17 Kelsy Alyse Wurfel
2002 14 Taylor Wurfel
Jackson Wurfel
2000 15 Jordan Allan Wurfel
1995 21 Rebekah Jane Seely
1996 19 Mathew David Seely
1998 17 Erin Victoria Seely
1998 17 Sophie Catherine Seely
1993 22 Nicholas Paul Wurfel
1996 19 Samuel James Wurfel
2001 14 Thomas Scott Wurfel
1994 21 Lauren Jennifer McLeod
1996 19 James Rory McLeod

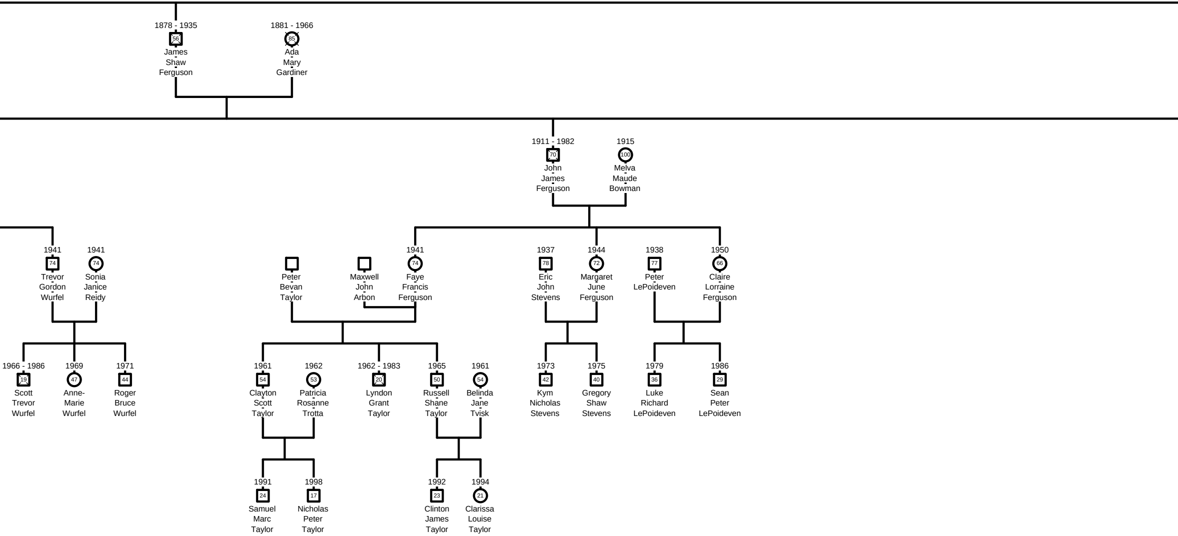
1878 - 1935
56
James Shaw Ferguson
1881 - 1966
85
Ada Mary Gardiner
1911 - 1982
70
John James Ferguson
1915
100
Melva Maude Bowman
1941
74
Trevor Gordon Wurfel
1941
74
Sonia Janice Reidy
Peter Bevan Taylor
Maxwell John Arbon
1941
74
Faye Francis Ferguson
1937
78
Eric John Stevens
1944
72
Margaret June Ferguson
1938
77
Peter LePoideven
1950
66
Claire Lorraine Ferguson
1966 - 1986
19
Scott Trevor Wurfel
1969
47
Anne-Marie Wurfel
1971
44
Roger Bruce Wurfel
1961
54
Clayton Scott Taylor
1962
53
Patricia Rosanne Trotta
1962 - 1983
20
Lyndon Grant Taylor
1965
50
Russell Shane Taylor
1961
54
Belinda Jane Tvisk
1973
42
Kym Nicholas Stevens
1975
40
Gregory Shaw Stevens
1979
36
Luke Richard LePoideven
1986
29
Sean Peter LePoideven
1991
24
Samuel Marc Taylor
1998
17
Nicholas Peter Taylor
1992
23
Clinton James Taylor
1994
21
Clarissa Louise Taylor

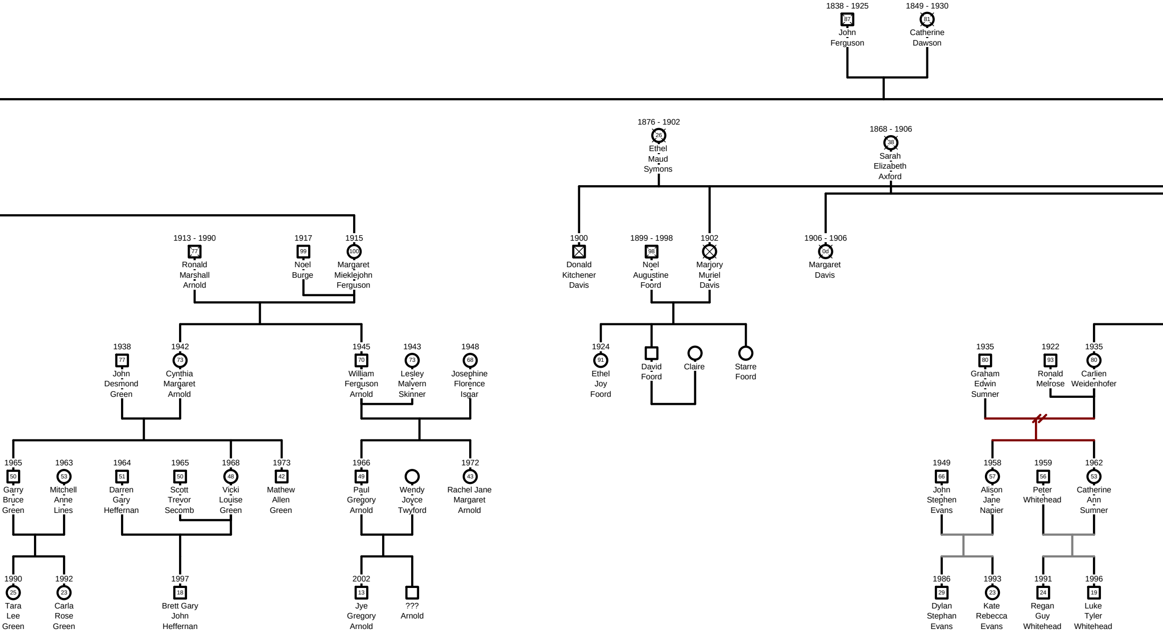
1838 - 1925
87
John Ferguson
1849 - 1930
81
Catherine Dawson
1876 - 1902
26
Ethel Maud Symons
1868 - 1906
38
Sarah Elizabeth Axford
1913 - 1990
77
Ronald Marshall Arnold
1917
99
Noel Burge
1915
100
Margaret Mieklejohn Ferguson
1900
Donald Kitchener Davis
1899 - 1998
98
Noel Augustine Foord
1902
Marjory Muriel Davis
1906 - 1906
0d
Margaret Davis
1938
77
John Desmond Green
1942
73
Cynthia Margaret Arnold
1945
70
William Ferguson Arnold
1943
73
Lesley Malvern Skinner
1948
68
Josephine Florence Isgar
1924
91
Ethel Joy Foord
David Foord
Claire
Starre Foord
1935
80
Graham Edwin Sumner
1922
93
Ronald Melrose
1935
80
Carlien Weidenhofer
1965
50
Garry Bruce Green
1963
53
Mitchell Anne Lines
1964
51
Darren Gary Heffernan
1965
50
Scott Trevor Secomb
1968
48
Vicki Louise Green
1973
42
Mathew Allen Green
1966
49
Paul Gregory Arnold
Wendy Joyce Twyford
1972
43
Rachel Jane Margaret Arnold
1949
66
John Stephen Evans
1958
57
Alison Jane Napier
1959
56
Peter Whitehead
1962
53
Catherine Ann Sumner
1990
25
Tara Lee Green
1992
23
Carla Rose Green
1997
18
Brett Gary John Heffernan
2002
13
Jye Gregory Arnold
???
Arnold
1986
29
Dylan Stephan Evans
1993
23
Kate Rebecca Evans
1991
24
Regan Guy Whitehead
1996
19
Luke Tyler Whitehead

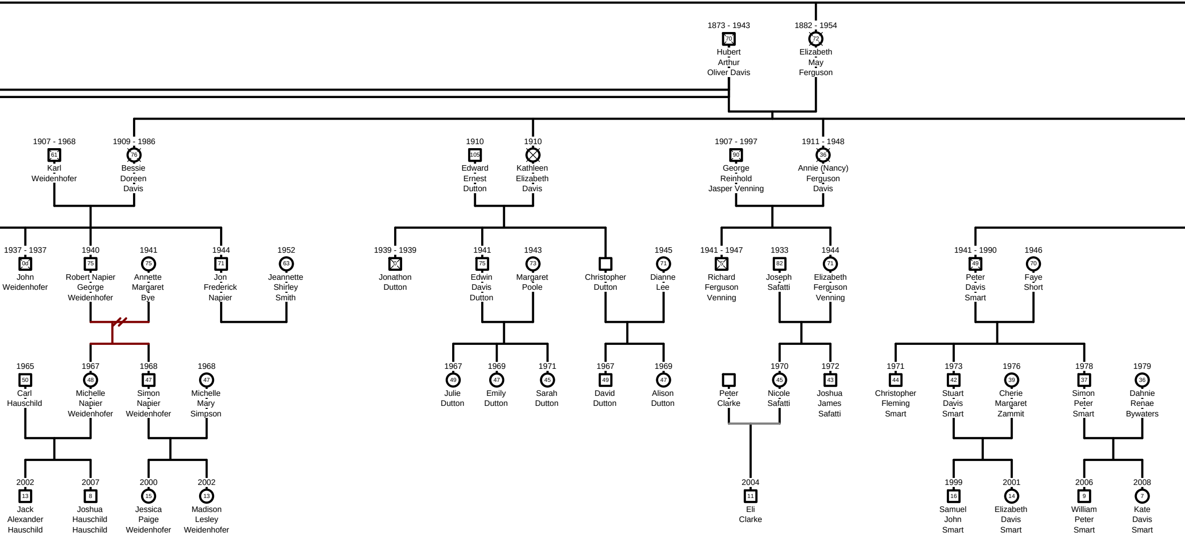
1873 - 1943
70
Hubert Arthur Oliver Davis
1882 - 1954
72
Elizabeth May Ferguson
1907 - 1968
61
Karl Weidenhofer
1909 - 1986
76
Bessie Doreen Davis
1910
105
Edward Ernest Dutton
1910
Kathleen Elizabeth Davis
1907 - 1997
90
George Reinhold Jasper Venning
1911 - 1948
36
Annie (Nancy) Ferguson Davis
1937 - 1937
0d
John Weidenhofer
1940
75
Robert Napier George Weidenhofer
1941
75
Annette Margaret Bye
1944
71
Jon Frederick Napier
1952
63
Jeannette Shirley Smith
1939 - 1939
0
Jonathon Dutton
1941
75
Edwin Davis Dutton
1943
73
Margaret Poole
Christopher Dutton
1945
71
Dianne Lee
1941 - 1947
5
Richard Ferguson Venning
1933
82
Joseph Safatti
1944
71
Elizabeth Ferguson Venning
1941 - 1990
49
Peter Davis Smart
1946
70
Faye Short
1965
50
Carl Hauschild
1967
48
Michelle Napier Weidenhofer
1968
47
Simon Napier Weidenhofer
1968
47
Michelle Mary Simpson
1967
49
Julie Dutton
1969
47
Emily Dutton
1971
45
Sarah Dutton
1967
49
David Dutton
1969
47
Alison Dutton
Peter Clarke
1970
45
Nicole Safatti
1972
43
Joshua James Safatti
1971
44
Christopher Fleming Smart
1973
42
Stuart Davis Smart
1976
39
Cherie Margaret Zammit
1978
37
Simon Peter Smart
1979
36
Dahnie Renae Bywaters
2002
13
Jack Alexander Hauschild
2007
8
Joshua Hauschild Hauschild
2000
15
Jessica Paige Weidenhofer
2002
13
Madison Lesley Weidenhofer
2004
11
Eli Clarke
1999
16
Samuel John Smart
2001
14
Elizabeth Davis Smart
2006
9
William Peter Smart
2008
7
Kate Davis Smart

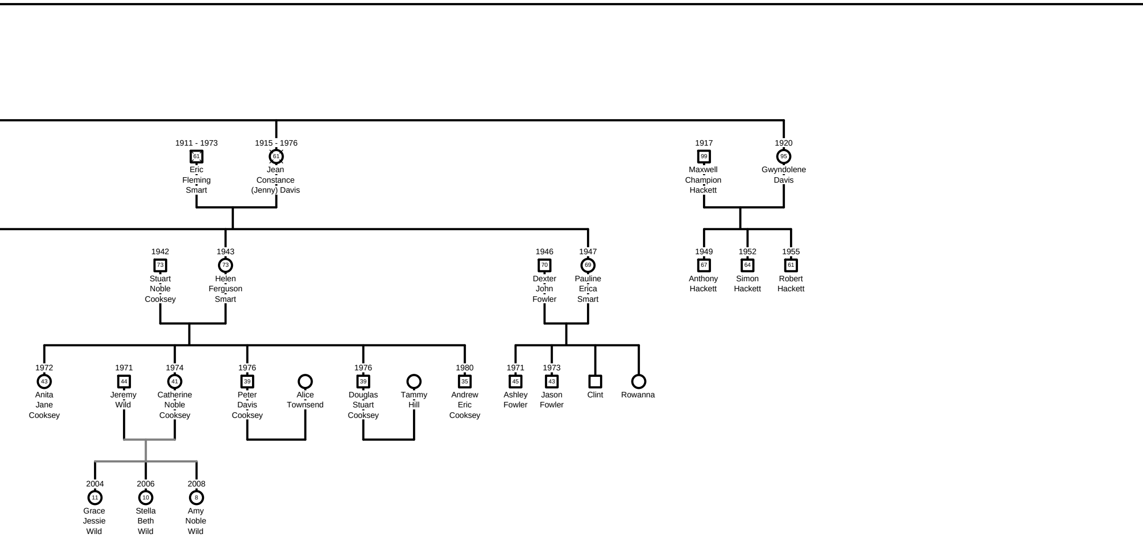
1911 - 1973
61
Eric Fleming Smart
1915 - 1976
61
Jean Constance (Jenny) Davis
1917
99
Maxwell Champion Hackett
1920
95
Gwyndolene Davis
1942
73
Stuart Noble Cooksey
1943
73
Helen Ferguson Smart
1946
70
Dexter John Fowler
1947
69
Pauline Erica Smart
1949
67
Anthony Hackett
1952
64
Simon Hackett
1955
61
Robert Hackett
1972
43
Anita Jane Cooksey
1971
44
Jeremy Wild
1974
41
Catherine Noble Cooksey
1976
39
Peter Davis Cooksey
Alice Townsend
1976
39
Douglas Stuart Cooksey
Tammy Hill
1980
35
Andrew Eric Cooksey
1971
45
Ashley Fowler
1973
43
Jason Fowler
Clint
Rowanna
2004
11
Grace Jessie Wild
2006
10
Stella Beth Wild
2008
8
Amy Noble Wild

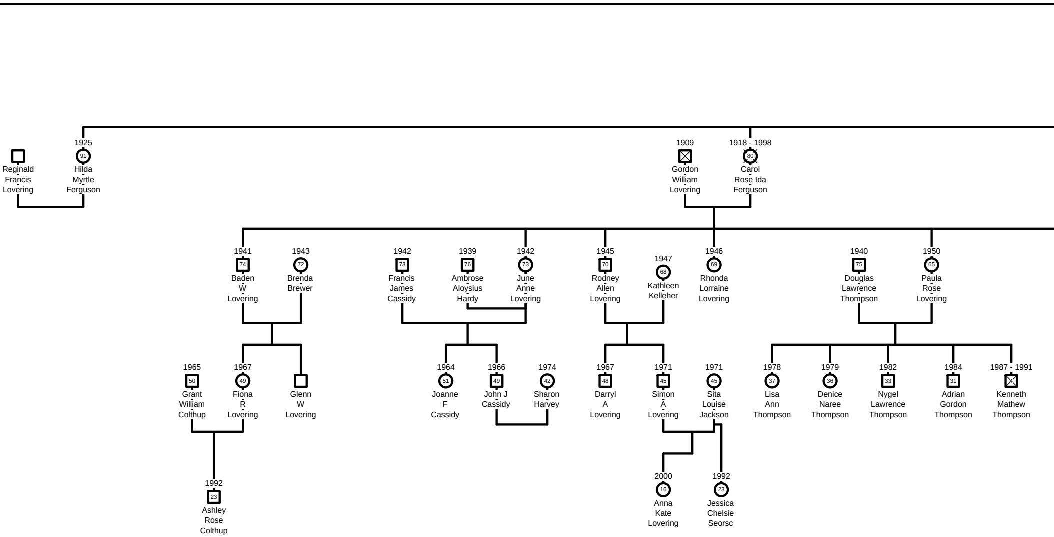
Reginald Francis Lovering
1925
91
Hilda Myrtle Ferguson
1909
Gordon William Lovering
1918 - 1998
80
Carol Rose Ida Ferguson
1941
74
Baden W Lovering
1943
72
Brenda Brewer
1942
73
Francis James Cassidy
1939
76
Ambrose Aloysius Hardy
1942
73
June Anne Lovering
1945
70
Rodney Allen Lovering
1947
68
Kathleen Kelleher
1946
69
Rhonda Lorraine Lovering
1940
75
Douglas Lawrence Thompson
1950
65
Paula Rose Lovering
1965
50
Grant William Colthup
1967
49
Fiona R Lovering
Glenn W Lovering
1964
51
Joanne F Cassidy
1966
49
John J Cassidy
1974
42
Sharon Harvey
1967
48
Darryl A Lovering
1971
45
Simon A Lovering
1971
45
Sita Louise Jackson
1978
37
Lisa Ann Thompson
1979
36
Denice Naree Thompson
1982
33
Nygel Lawrence Thompson
1984
31
Adrian Gordon Thompson
1987 - 1991
4
Kenneth Mathew Thompson
1992
23
Ashley Rose Colthup
2000
16
Anna Kate Lovering
1992
23
Jessica Chelsie Seorsc

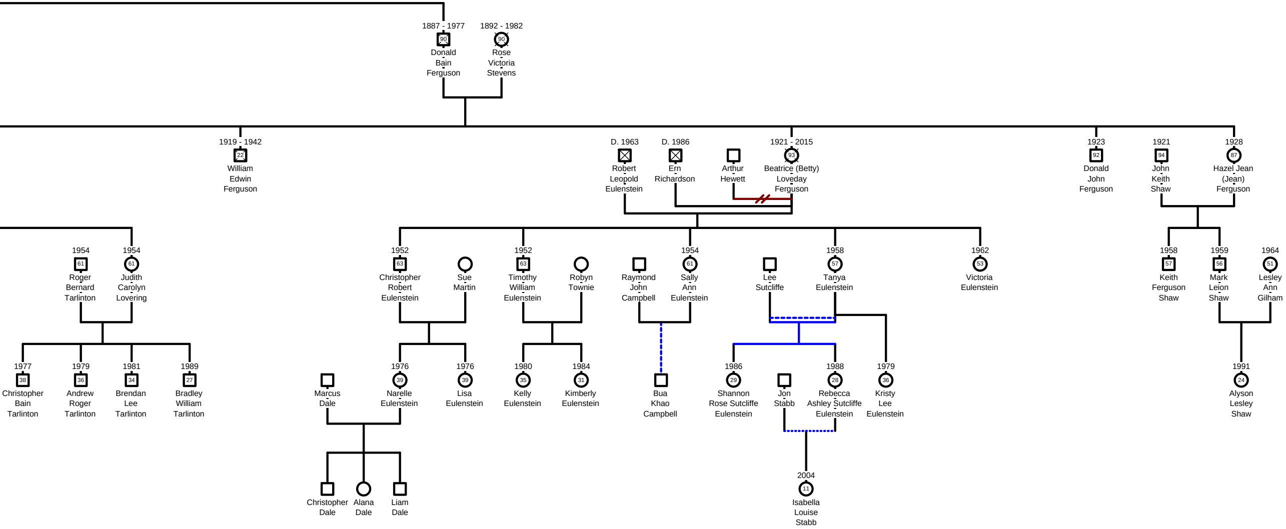
1887 - 1977
90
Donald Bain Ferguson
1892 - 1982
90
Rose Victoria Stevens
1919 - 1942
22
William Edwin Ferguson
D. 1963
Robert Leopold Eulenstein
D. 1986
Ern Richardson
Arthur Hewett
1921 - 2015
93
Beatrice (Betty) Loveday Ferguson
1923
92
Donald John Ferguson
1921
94
John Keith Shaw
1928
87
Hazel Jean (Jean) Ferguson
1954
61
Roger Bernard Tarlinton
1954
61
Judith Carolyn Lovering
1952
63
Christopher Robert Eulenstein
Sue Martin
1952
63
Timothy William Eulenstein
Robyn Townie
Raymond John Campbell
1954
61
Sally Ann Eulenstein
Lee Sutcliffe
1958
57
Tanya Eulenstein
1962
53
Victoria Eulenstein
1958
57
Keith Ferguson Shaw
1959
56
Mark Leion Shaw
1964
51
Lesley Ann Gilham
1977
38
Christopher Bain Tarlinton
1979
36
Andrew Roger Tarlinton
1981
34
Brendan Lee Tarlinton
1989
27
Bradley William Tarlinton
Marcus Dale
1976
39
Narelle Eulenstein
1976
39
Lisa Eulenstein
1980
35
Kelly Eulenstein
1984
31
Kimberly Eulenstein
Bua Khao Campbell
1986
29
Shannon Rose Sutcliffe Eulenstein
Jon Stabb
1988
28
Rebecca Ashley Sutcliffe Eulenstein
1979
36
Kristy Lee Eulenstein
1991
24
Alyson Lesley Shaw
Christopher Dale
Alana Dale
Liam Dale
2004
11
Isabella Louise Stabb