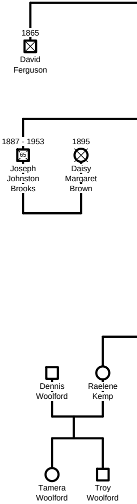
1865
David Ferguson
1887 - 1953
65
Joseph Johnston Brooks
1895
Daisy Margaret Brown
Dennis Woolford
Raelene Kemp
Tamera Woolford
Troy Woolford

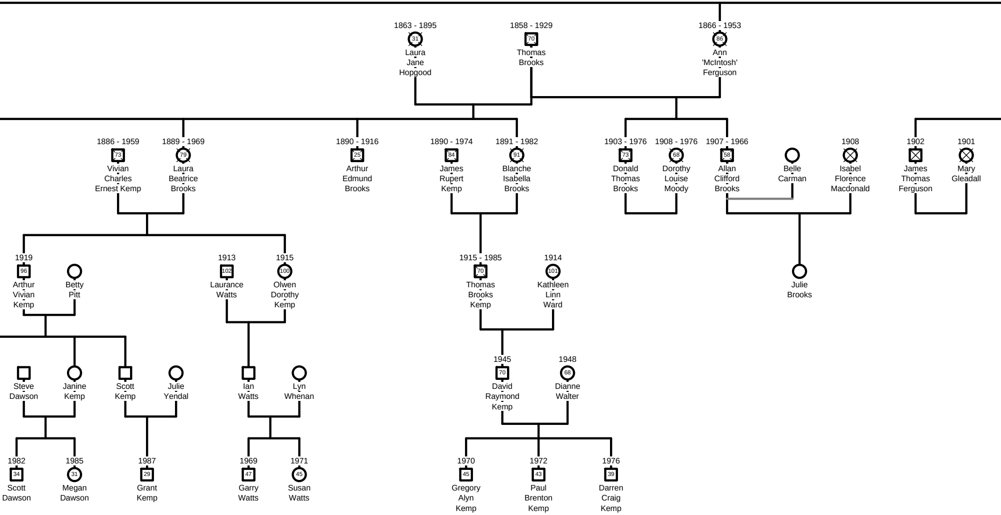
1863 - 1895
31
Laura Jane Hopgood
1858 - 1929
70
Thomas Brooks
1866 - 1953
86
Ann 'McIntosh' Ferguson
1886 - 1959
73
Vivian Charles Ernest Kemp
1889 - 1969
79
Laura Beatrice Brooks
1890 - 1916
25
Arthur Edmund Brooks
1890 - 1974
84
James Rupert Kemp
1891 - 1982
91
Blanche Isabella Brooks
1903 - 1976
73
Donald Thomas Brooks
1908 - 1976
68
Dorothy Louise Moody
1907 - 1966
58
Allan Clifford Brooks
Belle Carman
1908
Isabel Florence Macdonald
1902
James Thomas Ferguson
1901
Mary Gleadall
1919
96
Arthur Vivian Kemp
Betty Pitt
1913
102
Laurance Watts
1915
100
Olwen Dorothy Kemp
1915 - 1985
70
Thomas Brooks Kemp
1914
101
Kathleen Linn Ward
Julie Brooks
Steve Dawson
Janine Kemp
Scott Kemp
Julie Yendal
Ian Watts
Lyn Whenan
1945
70
David Raymond Kemp
1948
68
Dianne Walter
1982
34
Scott Dawson
1985
31
Megan Dawson
1987
29
Grant Kemp
1969
47
Garry Watts
1971
45
Susan Watts
1970
45
Gregory Alyn Kemp
1972
43
Paul Brenton Kemp
1976
39
Darren Craig Kemp

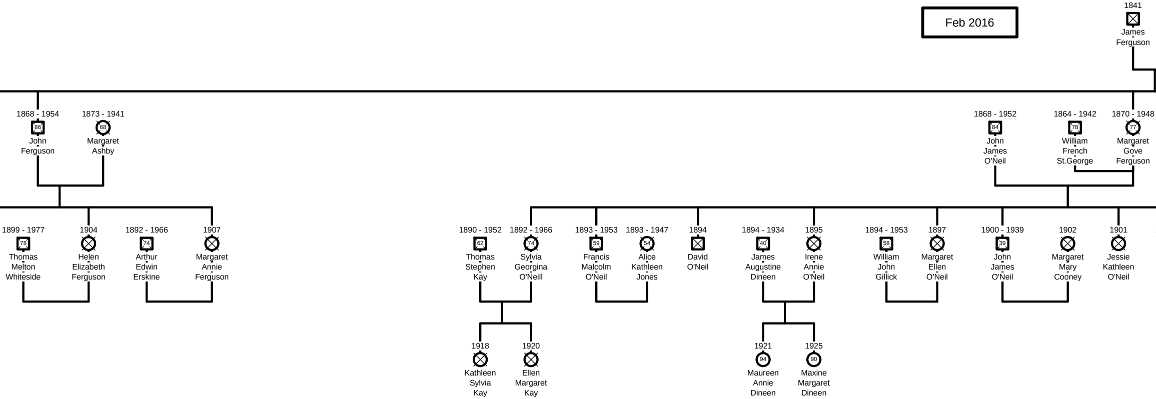
Feb 2016
1841 James Ferguson
1868 - 1954 86 John Ferguson
1873 - 1941 68 Margaret Ashby
1868 - 1952 84 John James O'Neil
1864 - 1942 78 William French St.George
1870 - 1948 77 Margaret Gove Ferguson
1899 - 1977 78 Thomas Melton Whiteside
1904 Helen Elizabeth Ferguson
1892 - 1966 74 Arthur Edwin Erskine
1907 Margaret Annie Ferguson
1890 - 1952 62 Thomas Stephen Kay
1892 - 1966 74 Sylvia Georgina O'Neill
1893 - 1953 59 Francis Malcolm O'Neil
1893 - 1947 54 Alice Kathleen Jones
1894 David O'Neil
1894 - 1934 40 James Augustine Dineen
1895 Irene Annie O'Neil
1894 - 1953 58 William John Gillick
1897 Margaret Ellen O'Neil
1900 - 1939 39 John James O'Neil
1902 Margaret Mary Cooney
1901 Jessie Kathleen O'Neil
1918 Kathleen Sylvia Kay
1920 Ellen Margaret Kay
1921 94 Maureen Annie Dineen
1925 90 Maxine Margaret Dineen

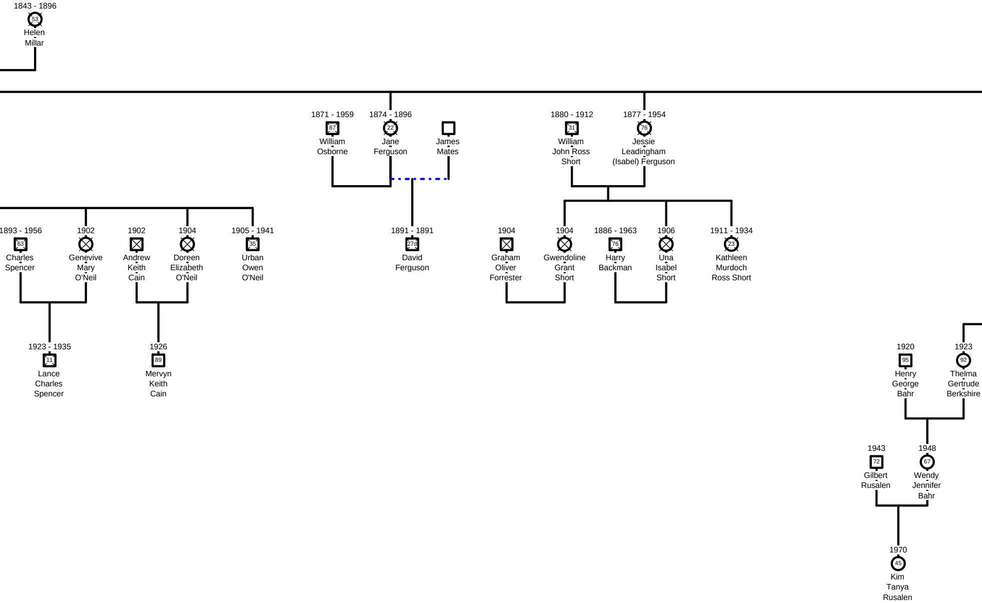
1843 - 1896
53
Helen Millar
1871 - 1959
87
William Osborne
1874 - 1896
22
Jane Ferguson
James Mates
1880 - 1912
31
William John Ross Short
1877 - 1954
76
Jessie Leadingham (Isabel) Ferguson
1893 - 1956
63
Charles Spencer
1902
Genevive Mary O'Neil
1902
Andrew Keith Cain
1904
Doreen Elizabeth O'Neil
1905 - 1941
35
Urban Owen O'Neil
1891 - 1891
27d
David Ferguson
1904
Graham Oliver Forrester
1904
Gwendoline Grant Short
1886 - 1963
76
Harry Backman
1906
Una Isabel Short
1911 - 1934
23
Kathleen Murdoch Ross Short
1923 - 1935
11
Lance Charles Spencer
1926
89
Mervyn Keith Cain
1920
95
Henry George Bahr
1923
92
Thelma Gertrude Berkshire
1943
72
Gilbert Rusalen
1948
67
Wendy Jennifer Bahr
1970
45
Kim Tanya Rusalen

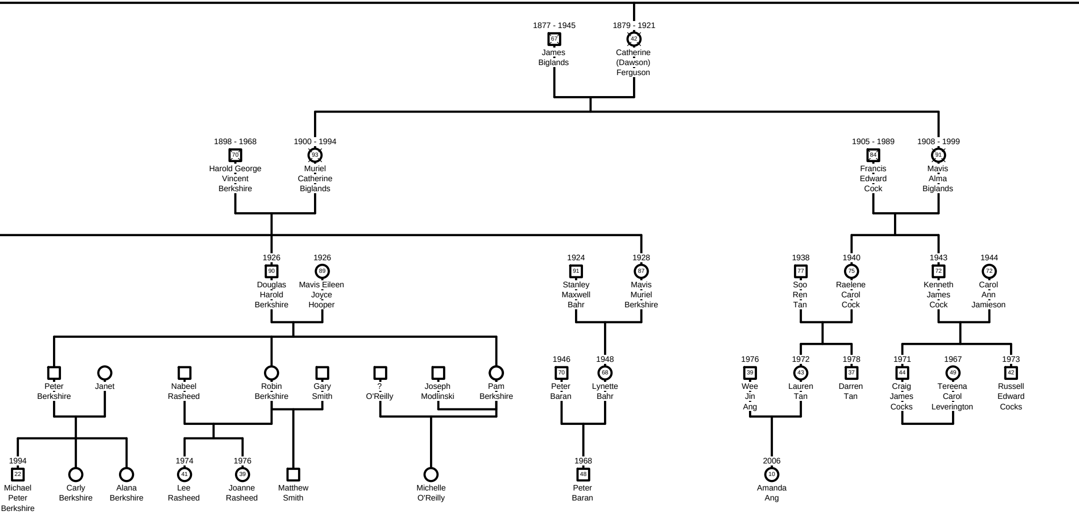
1877 - 1945
67
James Biglands
1879 - 1921
42
Catherine (Dawson) Ferguson
1898 - 1968
70
Harold George Vincent Berkshire
1900 - 1994
93
Muriel Catherine Biglands
1905 - 1989
84
Francis Edward Cock
1908 - 1999
91
Mavis Alma Biglands
1926
90
Douglas Harold Berkshire
1926
89
Mavis Eileen Joyce Hooper
1924
91
Stanley Maxwell Bahr
1928
87
Mavis Muriel Berkshire
1938
77
Soo Ren Tan
1940
75
Raelene Carol Cock
1943
72
Kenneth James Cock
1944
72
Carol Ann Jamieson
Peter Berkshire
Janet
Nabeel Rasheed
Robin Berkshire
Gary Smith
?
O'Reilly
Joseph Modlinski
Pam Berkshire
1946
70
Peter Baran
1948
68
Lynette Bahr
1976
39
Wee Jin Ang
1972
43
Lauren Tan
1978
37
Darren Tan
1971
44
Craig James Cocks
1967
49
Tereena Carol Leverington
1973
42
Russell Edward Cocks
1994
22
Michael Peter Berkshire
Carly Berkshire
Alana Berkshire
1974
41
Lee Rasheed
1976
39
Joanne Rasheed
Matthew Smith
Michelle O'Reilly
1968
48
Peter Baran
2006
10
Amanda Ang

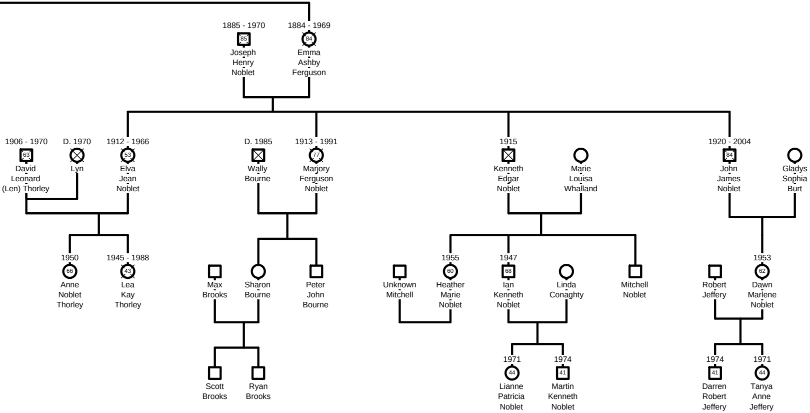
1885 - 1970
85
Joseph Henry Noblet
1884 - 1969
84
Emma Ashby Ferguson
1906 - 1970
63
David Leonard (Len) Thorley
D. 1970
Lyn
1912 - 1966
53
Elva Jean Noblet
D. 1985
Wally Bourne
1913 - 1991
77
Marjory Ferguson Noblet
1915
Kenneth Edgar Noblet
Marie Louisa Whalland
1920 - 2004
84
John James Noblet
Gladys Sophia Burt
1950
66
Anne Noblet Thorley
1945 - 1988
43
Lea Kay Thorley
Max Brooks
Sharon Bourne
Peter John Bourne
Unknown Mitchell
1955
60
Heather Marie Noblet
1947
68
Ian Kenneth Noblet
Linda Conaghty
Mitchell Noblet
Robert Jeffery
1953
62
Dawn Marlene Noblet
Scott Brooks
Ryan Brooks
1971
44
Lianne Patricia Noblet
1974
41
Martin Kenneth Noblet
1974
41
Darren Robert Jeffery
1971
44
Tanya Anne Jeffery