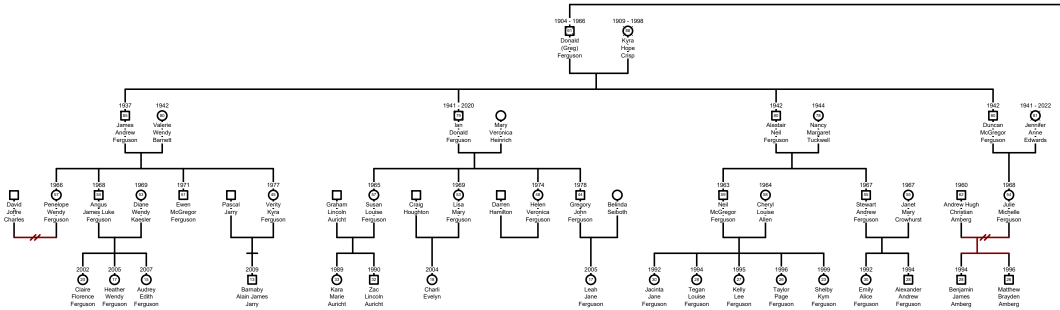
1904 - 1966
61
Donald (Greg) Ferguson
1909 - 1998
88
Kyra Hope Crisp
1937
85
James Andrew Ferguson
1942
80
Valerie Wendy Barnett
1941 - 2020
79
Ian Donald Ferguson
Mary Veronica Heinrich
1942
80
Alastair Neil Ferguson
1944
78
Nancy Margaret Tuckwell
1942
80
Duncan McGregor Ferguson
1941 - 2022
81
Jennifer Anne Edwards
David Joffre Charles
1966
57
Penelope Wendy Ferguson
1968
54
Angus James Luke Ferguson
1969
53
Diane Wendy Kaesler
1971
51
Ewen McGregor Ferguson
Pascal Jarry
1977
45
Verity Kyra Ferguson
Graham Lincoln Auricht
1965
57
Susan Louise Ferguson
Craig Houghton
1969
53
Lisa Mary Ferguson
Darren Hamilton
1974
48
Helen Veronica Ferguson
1978
44
Gregory John Ferguson
Belinda Seiboth
1963
59
Neil McGregor Ferguson
1964
58
Cheryl Louise Allen
1967
55
Stewart Andrew Ferguson
1967
55
Janet Mary Crowhurst
1960
62
Andrew Hugh Christian Amberg
1968
54
Julie Michelle Ferguson
2002
20
Claire Florence Ferguson
2005
17
Heather Wendy Ferguson
2007
15
Audrey Edith Ferguson
2009
13
Barnaby Alain James Jarry
1989
33
Kara Marie Auricht
1990
32
Zac Lincoln Auricht
2004
18
Charli Evelyn
2005
17
Leah Jane Ferguson
1992
30
Jacinta Jane Ferguson
1994
28
Tegan Louise Ferguson
1995
27
Kelly Lee Ferguson
1996
26
Taylor Page Ferguson
1999
23
Shelby Kym Ferguson
1992
30
Emily Alice Ferguson
1994
28
Alexander Andrew Ferguson
1994
28
Benjamin James Amberg
1996
26
Matthew Brayden Amberg

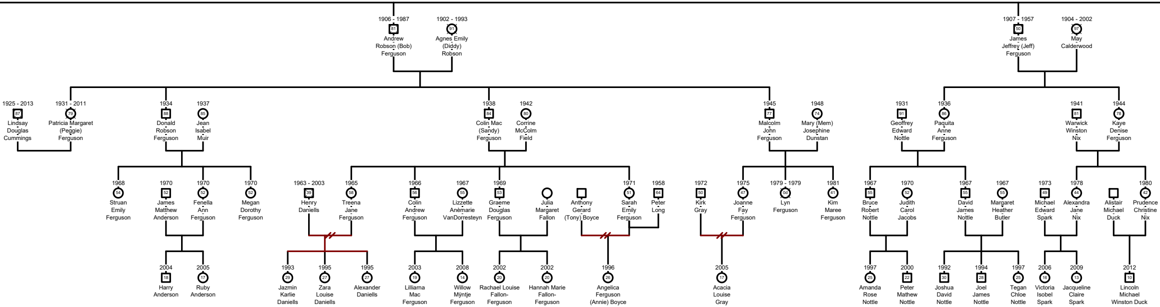
1906 - 1987 81 Andrew Robson (Bob) Ferguson
1902 - 1993 91 Agnes Emily (Diddy) Robson
1907 - 1957 50 James Jeffrey (Jeff) Ferguson
1904 - 2002 97 May Calderwood
1925 - 2013 87 Lindsay Douglas Cummings
1931 - 2011 79 Patricia Margaret (Peggie) Ferguson
1934 88 Donald Robson Ferguson
1937 85 Jean Isabel Muir
1938 84 Colin Mac (Sandy) Ferguson
1942 80 Corrine McColm Field
1945 77 Malcolm John Ferguson
1948 74 Mary (Mem) Josephine Dunstan
1931 91 Geoffrey Edward Nottle
1936 86 Paquita Anne Ferguson
1941 81 Warwick Winston Nix
1944 78 Kaye Denise Ferguson
1968 54 Struan Emily Ferguson
1970 52 James Matthew Anderson
1970 52 Fenella Ann Ferguson
1970 52 Megan Dorothy Ferguson
1963 - 2003 39 Henry Daniells
1965 58 Treena Jane Ferguson
1966 56 Colin Andrew Ferguson
1967 55 Lizzette Anèmarie VanDorresteyn
1969 53 Graeme Douglas Ferguson
Julia Margaret Fallon
Anthony Gerard (Tony) Boyce
1971 51 Sarah Emily Ferguson
1958 64 Peter Long
1972 50 Kirk Gray
1975 47 Joanne Fay Ferguson
1979 - 1979 0d Lyn Ferguson
1981 41 Kim Maree Ferguson
1967 55 Bruce Robert Nottle
1970 52 Judith Carol Jacobs
1967 55 David James Nottle
1967 55 Margaret Heather Butler
1973 49 Michael Edward Spark
1978 44 Alexandra Jane Nix
Alistair Michael Duck
1980 42 Prudence Christine Nix
2004 18 Harry Anderson
2005 17 Ruby Anderson
1993 29 Jazmin Karlie Daniells
1995 27 Zara Louise Daniells
1995 27 Alexander Daniells
2003 19 Lilliarna Mac Ferguson
2008 14 Willow Mÿntje Ferguson
2002 20 Rachael Louise Fallon-Ferguson
2002 20 Hannah Marie Fallon-Ferguson
1996 26 Angelica Ferguson (Annie) Boyce
2005 17 Acacia Louise Gray
1997 25 Amanda Rose Nottle
2000 22 Peter Mathew Nottle
1992 30 Joshua David Nottle
1994 28 Joel James Nottle
1997 25 Tegan Chloe Nottle
2006 16 Victoria Isobel Spark
2009 13 Jacqueline Claire Spark
2012 10 Lincoln Michael Winston Duck

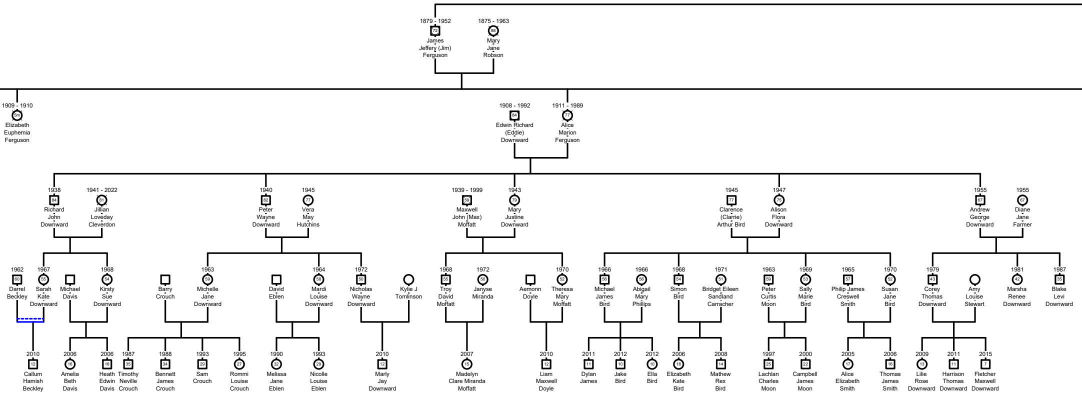
1879 - 1952 72 James Jeffery (Jim) Ferguson
1875 - 1963 88 Mary Jane Robson
1909 - 1910 5m Elizabeth Euphemia Ferguson
1908 - 1992 84 Edwin Richard (Eddie) Downward
1911 - 1989 77 Alice Marion Ferguson
1938 84 Richard John Downward
1941 - 2022 81 Jillian Loveday Cleverdon
1940 82 Peter Wayne Downward
1945 77 Vera May Hutchins
1939 - 1999 59 Maxwell John (Max) Moffatt
1943 79 Mary Justine Downward
1945 77 Clarence (Clarrie) Arthur Bird
1947 75 Alison Flora Downward
1955 67 Andrew George Downward
1955 67 Diane Jane Farmer
1962 60 Darrel Beckley
1967 55 Sarah Kate Downward
Michael Davis
1968 54 Kirsty Sue Downward
Barry Crouch
1963 59 Michelle Jane Downward
David Eblen
1964 58 Mardi Louise Downward
1972 50 Nicholas Wayne Downward
Kylie J Tomlinson
1968 55 Troy David Moffatt
1972 50 Janyse Miranda
Aemonn Doyle
1970 52 Theresa Mary Moffatt
1966 56 Michael James Bird
1966 56 Abigail Mary Phillips
1968 54 Simon Bird
1971 51 Bridget Eileen Sandland Carracher
1963 59 Peter Curtis Moon
1969 53 Sally Marie Bird
1965 57 Philip James Creswell Smith
1970 52 Susan Jane Bird
1979 43 Corey Thomas Downward
Amy Louise Stewart
1981 42 Marsha Renee Downward
1987 35 Blake Levi Downward
2010 12 Callum Hamish Beckley
2006 16 Amelia Beth Davis
2006 16 Heath Edwin Davis
1987 35 Timothy Neville Crouch
1988 34 Bennett James Crouch
1993 29 Sam Crouch
1995 27 Rommi Louise Crouch
1990 32 Melissa Jane Eblen
1993 29 Nicolle Louise Eblen
2010 12 Marly Jay Downward
2007 15 Madelyn Clare Miranda Moffatt
2010 12 Liam Maxwell Doyle
2011 11 Dylan James
2012 10 Jake Bird
2012 10 Ella Bird
2006 16 Elizabeth Kate Bird
2008 14 Mathew Rex Bird
1997 25 Lachlan Charles Moon
2000 22 Campbell James Moon
2005 17 Alice Elizabeth Smith
2006 16 Thomas James Smith
2009 13 Lilie Rose Downward
2011 11 Harrison Thomas Downward
2015 7 Fletcher Maxwell Downward

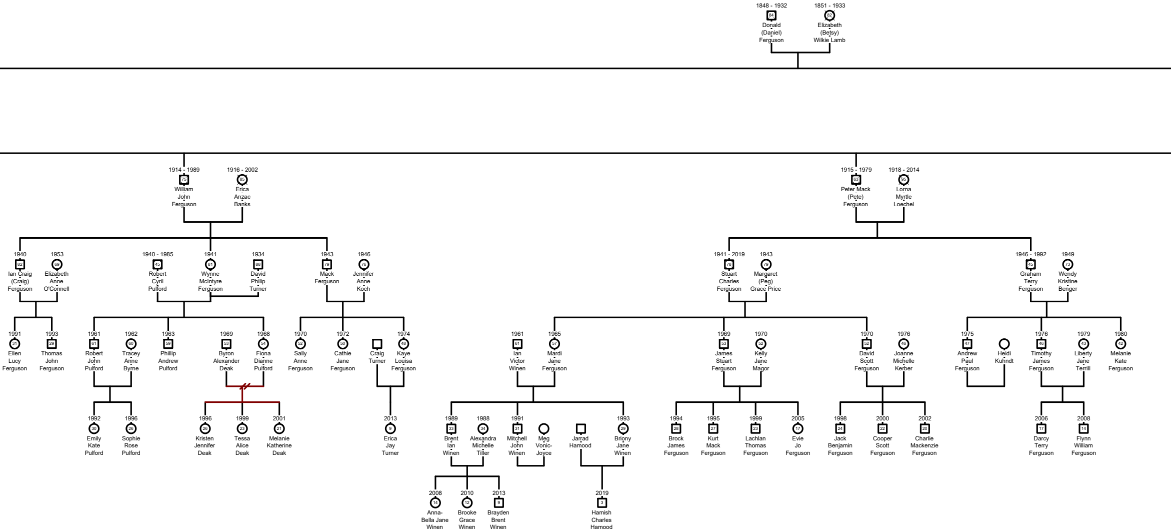
1848 - 1932
84
Donald (Daniel) Ferguson
1851 - 1933
82
Elizabeth (Betsy) Wilkie Lamb
1914 - 1989
75
William John Ferguson
1916 - 2002
85
Erica Anzac Banks
1915 - 1979
63
Peter Mack (Pete) Ferguson
1918 - 2014
95
Lorna Myrtle Loechel
1940
82
Ian Craig (Craig) Ferguson
1953
69
Elizabeth Anne O'Connell
1940 - 1985
45
Robert Cyril Pulford
1941
81
Wynne McIntyre Ferguson
1934
88
David Philip Turner
1943
79
Mack Ferguson
1946
76
Jennifer Anne Koch
1941 - 2019
78
Stuart Charles Ferguson
1943
79
Margaret (Peg) Grace Price
1946 - 1992
45
Graham Terry Ferguson
1949
73
Wendy Kristine Benger
1991
31
Ellen Lucy Ferguson
1993
29
Thomas John Ferguson
1961
61
Robert John Pulford
1962
60
Tracey Anne Byrne
1963
59
Phillip Andrew Pulford
1969
53
Byron Alexander Deak
1968
54
Fiona Dianne Pulford
1970
52
Sally Anne Ferguson
1972
50
Cathie Jane Ferguson
Craig Turner
1974
48
Kaye Louisa Ferguson
1961
61
Ian Victor Winen
1965
57
Mardi Jane Ferguson
1969
53
James Stuart Ferguson
1970
52
Kelly Jane Magor
1970
52
David Scott Ferguson
1976
46
Joanne Michelle Kerber
1975
47
Andrew Paul Ferguson
Heidi Kuhndt
1976
46
Timothy James Ferguson
1979
43
Liberty Jane Terrill
1980
42
Melanie Kate Ferguson
1992
30
Emily Kate Pulford
1996
26
Sophie Rose Pulford
1996
26
Kristen Jennifer Deak
1999
23
Tessa Alice Deak
2001
21
Melanie Katherine Deak
2013
9
Erica Jay Turner
1989
33
Brent Ian Winen
1988
34
Alexandra Michelle Tiller
1991
31
Mitchell John Winen
Meg Vonic-Joyce
Jarrad Hamood
1993
29
Briony Jane Winen
1994
28
Brock James Ferguson
1995
27
Kurt Mack Ferguson
1999
23
Lachlan Thomas Ferguson
2005
17
Evie Jo Ferguson
1998
24
Jack Benjamin Ferguson
2000
22
Cooper Scott Ferguson
2002
20
Charlie Mackenzie Ferguson
2006
17
Darcy Terry Ferguson
2008
14
Flynn William Ferguson
2008
14
Anna-Bella Jane Winen
2010
12
Brooke Grace Winen
2013
9
Brayden Brent Winen
2019
3
Hamish Charles Hamood

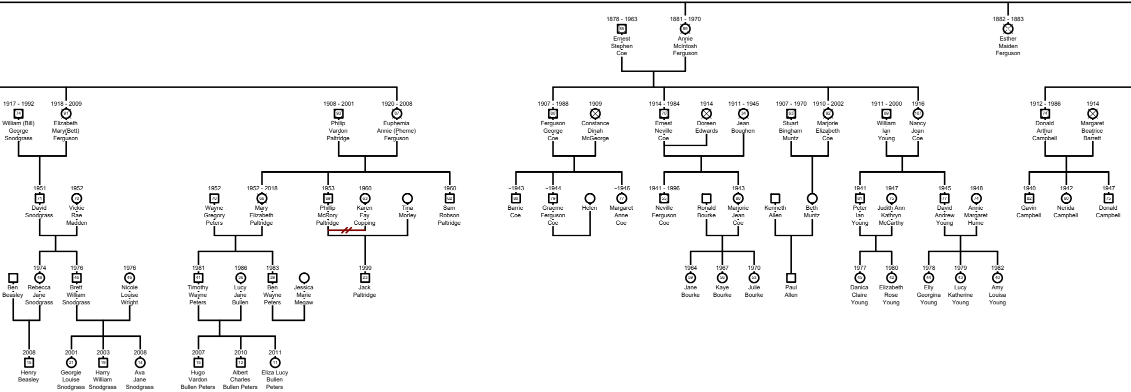
1878 - 1963
85
Ernest Stephen Coe
1881 - 1970
89
Annie McIntosh Ferguson
1882 - 1883
Esther Maiden Ferguson
1917 - 1992
74
William (Bill) George Snodgrass
1918 - 2009
91
Elizabeth Mary(Bett) Ferguson
1908 - 2001
93
Philip Vardon Paltridge
1920 - 2008
87
Euphemia Annie (Pheme) Ferguson
1907 - 1988
80
Ferguson George Coe
1909
Constance Dinah McGeorge
1914 - 1984
70
Ernest Neville Coe
1914
Doreen Edwards
1911 - 1945
34
Jean Boughen
1907 - 1970
63
Stuart Bingham Muntz
1910 - 2002
92
Marjorie Elizabeth Coe
1911 - 2000
89
William Ian Young
1916
107
Nancy Jean Coe
1912 - 1986
74
Donald Arthur Campbell
1914
Margaret Beatrice Barrett
1951
71
David Snodgrass
1952
70
Vickie Rae Madden
1952
70
Wayne Gregory Peters
1952 - 2018
66
Mary Elizabeth Paltridge
1953
69
Phillip McRory Paltridge
1960
63
Karen Fay Copping
Tina Morley
1960
62
Sam Robson Paltridge
~1943
80
Barrie Coe
~1944
79
Graeme Ferguson Coe
Helen
~1946
77
Margaret Anne Coe
1941 - 1996
55
Neville Ferguson Coe
Ronald Bourke
1943
80
Marjorie Jean Coe
Kenneth Allen
Beth Muntz
1941
81
Peter Ian Young
1947
75
Judith Ann Kathryn McCarthy
1945
77
David Andrew Young
1948
74
Annie Margaret Hume
1940
82
Gavin Campbell
1942
80
Nerida Campbell
1947
75
Donald Campbell
Ben Beasley
1974
48
Rebecca Jane Snodgrass
1976
46
Brett William Snodgrass
1976
46
Nicole Louise Wright
1981
41
Timothy Wayne Peters
1986
36
Lucy Jane Bullen
1983
39
Ben Wayne Peters
Jessica Marie Megaw
1999
23
Jack Paltridge
1964
59
Jane Bourke
1967
56
Kaye Bourke
1970
53
Julie Bourke
Paul Allen
1977
45
Danica Claire Young
1980
42
Elizabeth Rose Young
1978
44
Elly Georgina Young
1979
43
Lucy Katherine Young
1982
40
Amy Louisa Young
2008
15
Henry Beasley
2001
21
Georgie Louise Snodgrass
2003
19
Harry William Snodgrass
2008
14
Ava Jane Snodgrass
2007
15
Hugo Vardon Bullen Peters
2010
12
Albert Charles Bullen Peters
2011
11
Eliza Lucy Bullen Peters

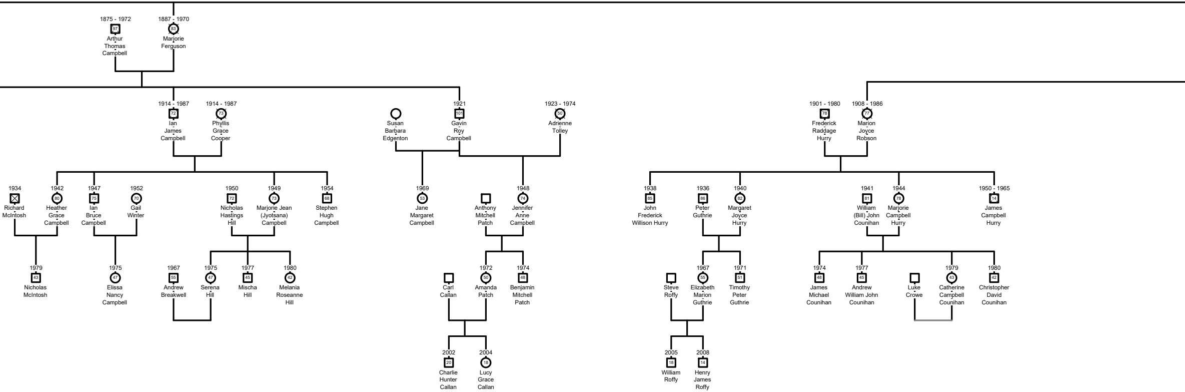
1875 - 1972
97
Arthur Thomas Campbell
1887 - 1970
83
Marjorie Ferguson
1914 - 1987
72
Ian James Campbell
1914 - 1987
73
Phyllis Grace Cooper
Susan Barbara Edgenton
1921
101
Gavin Roy Campbell
1923 - 1974
50
Adrienne Tolley
1901 - 1980
78
Frederick Raddage Hurry
1908 - 1986
77
Marion Joyce Robson
1934
Richard McIntosh
1942
80
Heather Grace Campbell
1947
75
Ian Bruce Campbell
1952
70
Gail Winter
1950
72
Nicholas Hastings Hill
1949
73
Marjorie Jean (Jyotsana) Campbell
1954
68
Stephen Hugh Campbell
1969
53
Jane Margaret Campbell
Anthony Mitchell Patch
1948
74
Jennifer Anne Campbell
1938
85
John Frederick Willison Hurry
1936
86
Peter Guthrie
1940
82
Margaret Joyce Hurry
1941
81
William (Bill) John Counihan
1944
78
Marjorie Campbell Hurry
1950 - 1965
14
James Campbell Hurry
1979
43
Nicholas McIntosh
1975
47
Elissa Nancy Campbell
1967
55
Andrew Breakwell
1975
47
Serena Hill
1977
45
Mischa Hill
1980
42
Melania Roseanne Hill
Carl Callan
1972
50
Amanda Patch
1974
48
Benjamin Mitchell Patch
Steve Roffy
1967
55
Elizabeth Marion Guthrie
1971
51
Timothy Peter Guthrie
1974
48
James Michael Counihan
1977
45
Andrew William John Counihan
Luke Crowe
1979
43
Catherine Campbell Counihan
1980
42
Christopher David Counihan
2002
20
Charlie Hunter Callan
2004
18
Lucy Grace Callan
2005
18
William Roffy
2008
14
Henry James Roffy

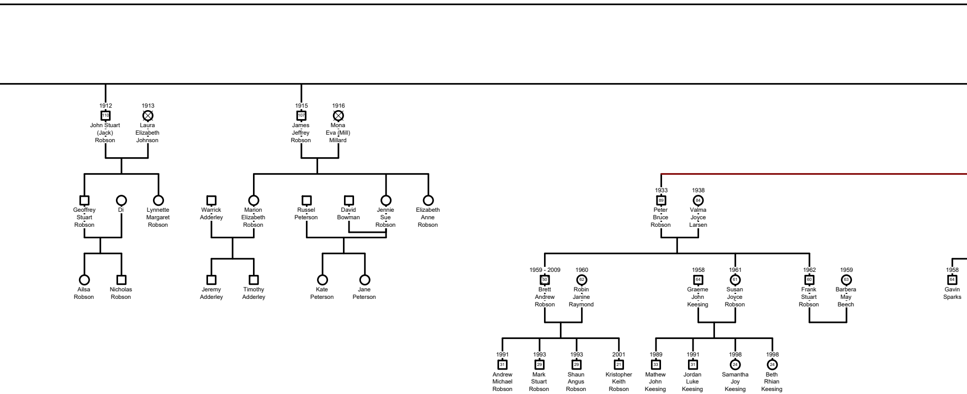
1912
110
John Stuart (Jack) Robson
1913
Laura Elizabeth Johnson
1915
107
James Jeffrey Robson
1916
Mona Eva (Mill) Millard
Geoffrey Stuart Robson
Di
Lynnette Margaret Robson
Warrick Adderley
Marion Elizabeth Robson
Russel Peterson
David Bowman
Jennie Sue Robson
Elizabeth Anne Robson
Ailsa Robson
Nicholas Robson
Jeremy Adderley
Timothy Adderley
Kate Peterson
Jane Peterson
1933
89
Peter Bruce Robson
1938
84
Valma Joyce Larsen
1959 - 2009
50
Brett Andrew Robson
1960
62
Robin Janine Raymond
1958
64
Graeme John Keesing
1961
61
Susan Joyce Robson
1962
60
Frank Stuart Robson
1959
63
Barbera May Beech
1958
64
Gavin Sparks
1991
31
Andrew Michael Robson
1993
29
Mark Stuart Robson
1993
29
Shaun Angus Robson
2001
21
Kristopher Keith Robson
1989
33
Mathew John Keesing
1991
31
Jordan Luke Keesing
1998
24
Samantha Joy Keesing
1998
24
Beth Rhian Keesing

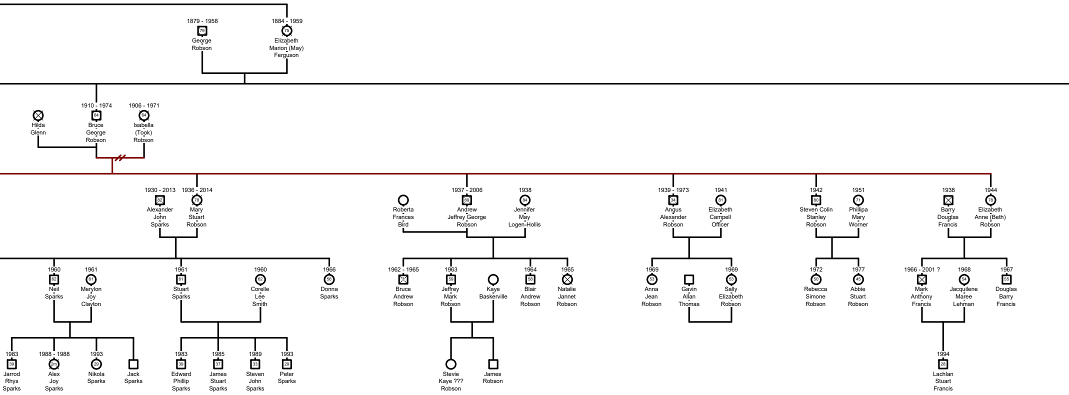
1879 - 1958
79
George Robson
1884 - 1959
75
Elizabeth Marion (May) Ferguson
Hilda Glenn
1910 - 1974
64
Bruce George Robson
1906 - 1971
64
Isabella (Took) Robson
1930 - 2013
82
Alexander John Sparks
1936 - 2014
78
Mary Stuart Robson
Roberta Frances Bird
1937 - 2006
69
Andrew Jeffrey George Robson
1938
84
Jennifer May Logen-Hollis
1939 - 1973
34
Angus Alexander Robson
1941
81
Elizabeth Campell Officer
1942
80
Steven Colin Stanley Robson
1951
71
Phillipa Mary Worner
1938
Barry Douglas Francis
1944
78
Elizabeth Anne (Beth) Robson
1960
62
Neil Sparks
1961
61
Merylon Joy Clayton
1961
61
Stuart Sparks
1960
62
Corelle Lee Smith
1966
56
Donna Sparks
1962 - 1965
3
Bruce Andrew Robson
1963
59
Jeffrey Mark Robson
Kaye Baskerville
1964
58
Blair Andrew Robson
1965
Natalie Jannet Robson
1969
53
Anna Jean Robson
Gavin Allan Thomas
1969
53
Sally Elizabeth Robson
1972
50
Rebecca Simone Robson
1977
45
Abbie Stuart Robson
1966 - 2001 ?
Mark Anthony Francis
1968
54
Jacquilene Maree Lehman
1967
55
Douglas Barry Francis
1983
39
Jarrod Rhys Sparks
1988 - 1988
2m
Alex Joy Sparks
1993
29
Nikola Sparks
Jack Sparks
1983
39
Edward Phillip Sparks
1985
37
James Stuart Sparks
1989
33
Steven John Sparks
1993
29
Peter Sparks
Stevie Kaye ??? Robson
James Robson
1994
28
Lachlan Stuart Francis

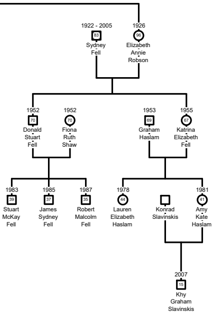
1922 - 2005
83
Sydney Fell
1926
96
Elizabeth Annie Robson
1952
70
Donald Stuart Fell
1952
70
Fiona Ruth Shaw
1953
69
Graham Haslam
1955
67
Katrina Elizabeth Fell
1983
39
Stuart McKay Fell
1985
37
James Sydney Fell
1987
35
Robert Malcolm Fell
1978
44
Lauren Elizabeth Haslam
Konrad Slavinskis
1981
41
Amy Kate Haslam
2007
15
Khy Graham Slavinskis